PE Review I : statics

Equilibrium Equations for planar structures

$\Sigma F_x = 0$

$\Sigma F_y = 0$

$\Sigma M_o = 0$

→ whole structure — find reactions

→ part of structure → find joint forces / moments

→ part of structural member → find internal forces/moments

Example

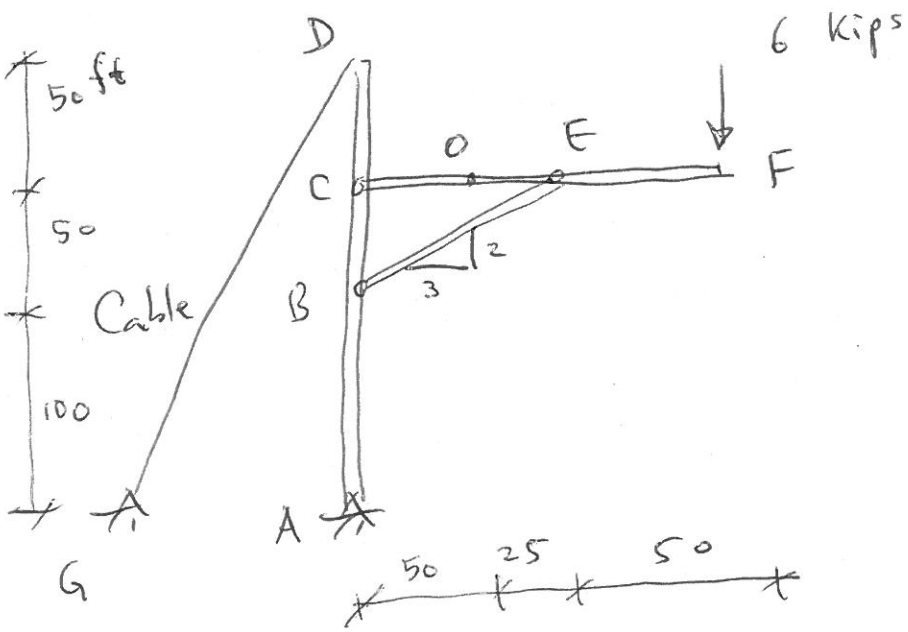

1° Reactions at A and G

2° Joints forces at B, C, and E

3° Internal forces and moment at O.

1° Free body diagram for whole structure

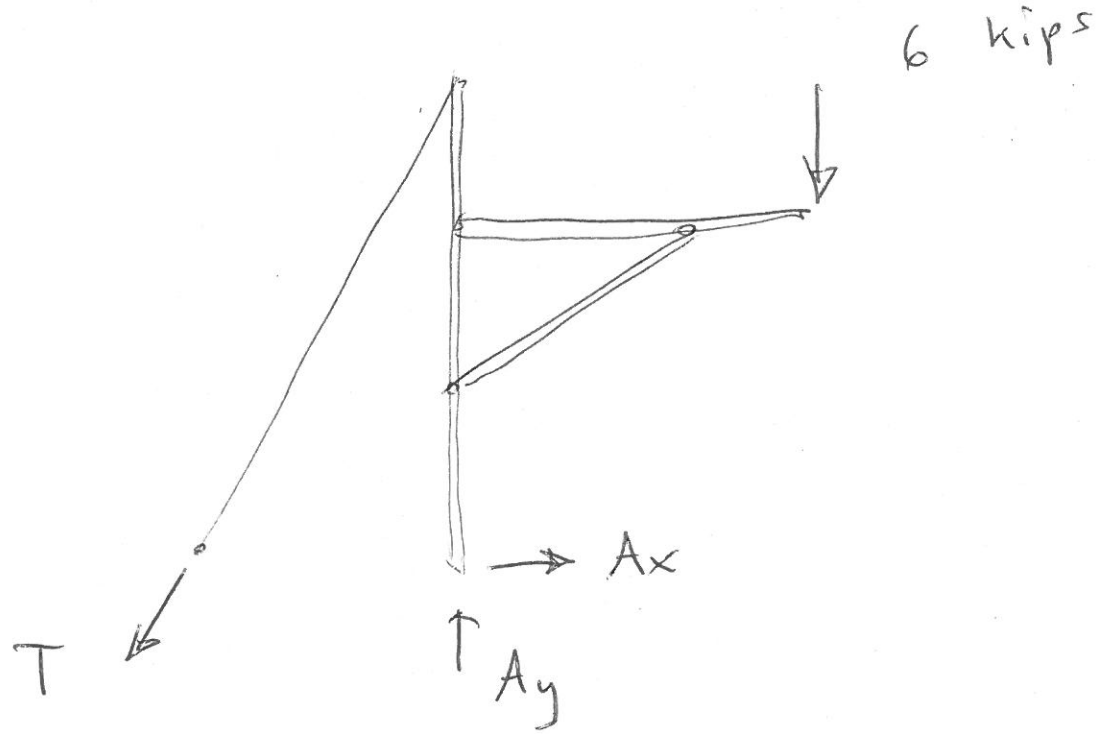

$\Sigma M_A = 0$, $(\circlearrowleft)$ $\quad -6(125) + T\sin 30^\circ (200) = 0$

$T = 7.5$ kips.

$\Sigma F_x = 0$, $(\rightarrow)$ $\quad A_x - 7.5\sin 30^\circ = 0$

$A_x = 3.75$ kips

$\Sigma F_y = 0$, $(\uparrow)$ $\quad A_y - 7.5\cos 30^\circ - 6 = 0$

$A_y = 12.5$ kips.

2° Free body diagram for part of structure

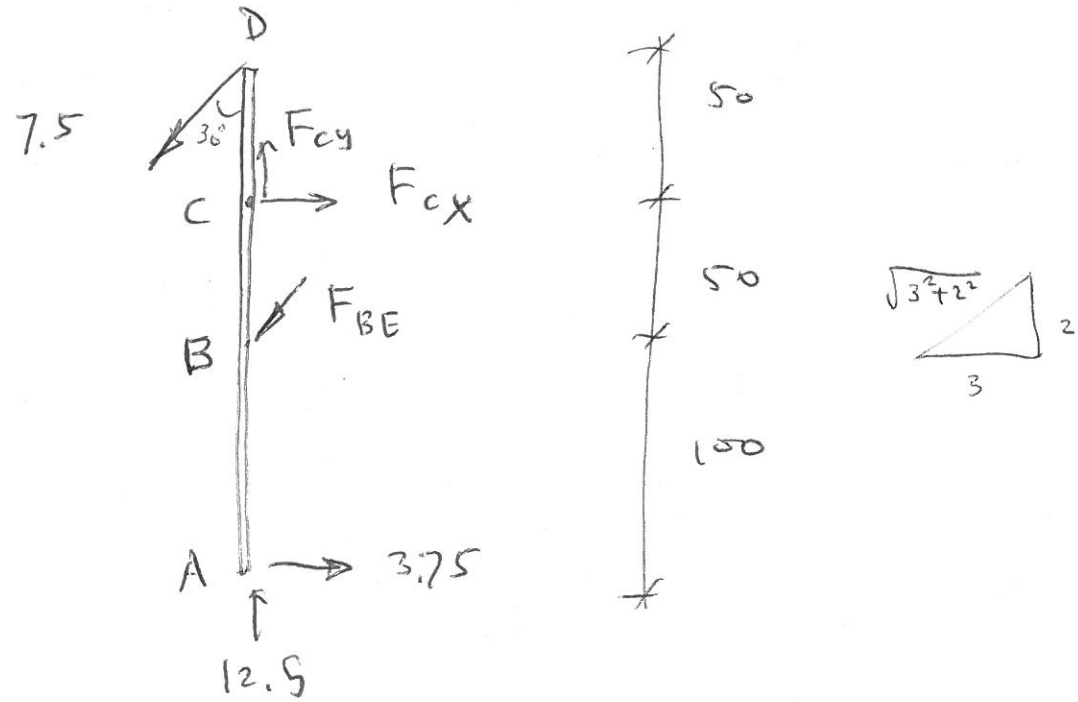

$\Sigma M_C = 0 \ (\circlearrowleft)$ $\quad 7.5 \sin 30^\circ (50) - F_{BE} \dfrac{3}{\sqrt{3^2+2^2}} (50) + 3.75 (150) = 0$

$F_{BE} = 18.03$ kips

$\Sigma F_x = 0 \ (\rightarrow)$ $\quad -7.5 \sin 30^\circ + F_{cx} - (18.03) \dfrac{3}{\sqrt{3^2+2^2}} + 3.75 = 0$

$F_{cx} = 15.09$ kips

$\Sigma F_y = 0 \ (\uparrow)$ $\quad -7.5 \cos 30^\circ + F_{cy} - (18.03) \dfrac{2}{\sqrt{3^2+2^2}} + 12.5 = 0$

$F_{cy} = 4$ kips

Alternative (2°)

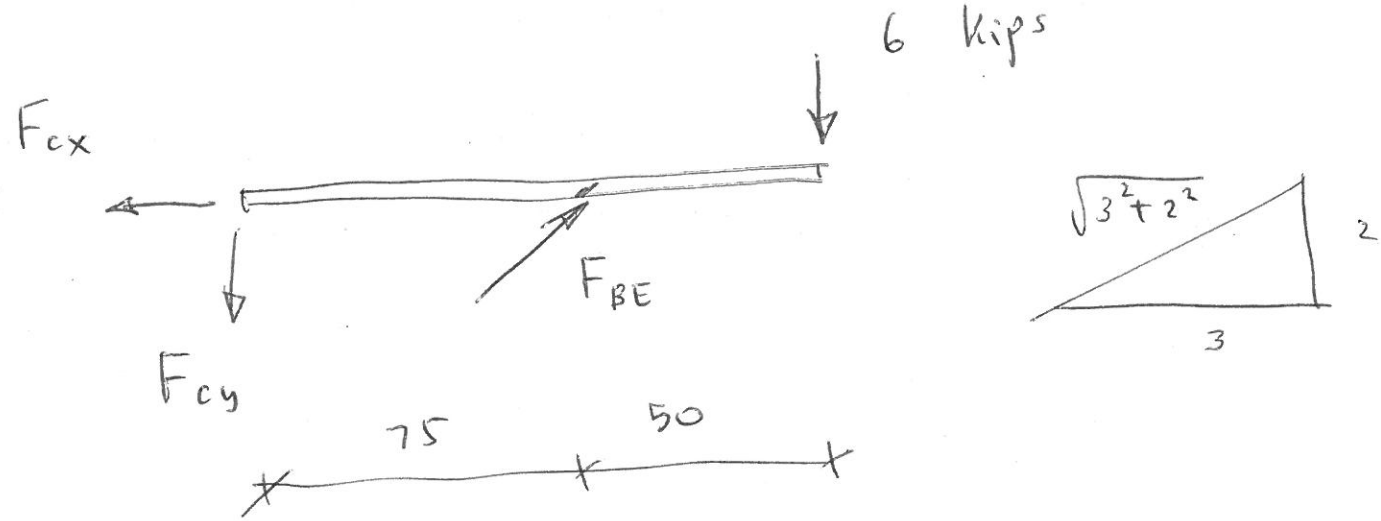

$\Sigma M_c = 0 \ (\circlearrowleft)$ $\qquad F_{BE} \dfrac{2}{\sqrt{3^2+2^2}} (75) - 6(125) = 0$

$$F_{BE} = 18.03 \text{ kips}$$

$\Sigma F_x = 0 \ (\rightarrow)$

$$-F_{cx} + 18.03 \frac{3}{\sqrt{3^2+2^2}} = 0$$

$$F_{cx} = 15 \text{ kips}$$

$\Sigma F_y = 0 \ (\uparrow)$ $\qquad -F_{cy} + 18.03 \dfrac{2}{\sqrt{3^2+2^2}} - 6 = 0$

$$F_{cy} = 4 \text{ kips}$$

3° Free body diagram for a part of structural member

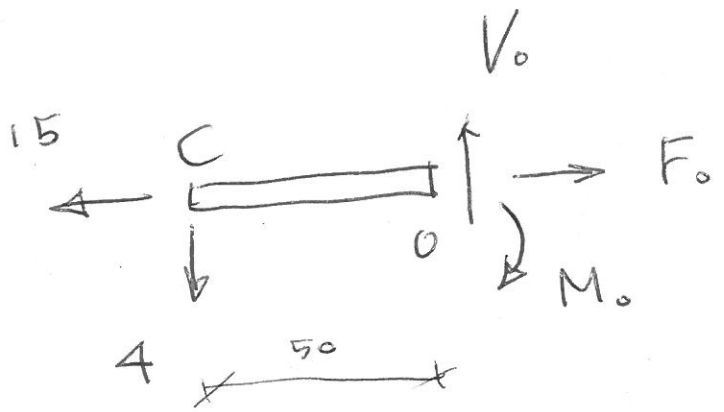

$\Sigma M_o = 0 \; (\circlearrowleft)$ $\quad 4(50) - M_o = 0$

$M_o = 200$ kips · ft

$\Sigma F_x = 0 \; (\rightarrow)$ $\quad -15 - F_o = 0$

$F_o = 15$ kips

$\Sigma F_y = 0 \; (\uparrow)$ $\quad -4 + V_o = 0$

$V_o = 4$ kips

Equilibrium Equations for Planar Truss

$\Sigma F_x = 0$

$\Sigma F_y = 0$

$\Sigma M_o = 0$

whole structure → find reactions

Part of structure → find internal forces (Method of sections)

joints of structure → find internal forces (Method of Joints)

Example

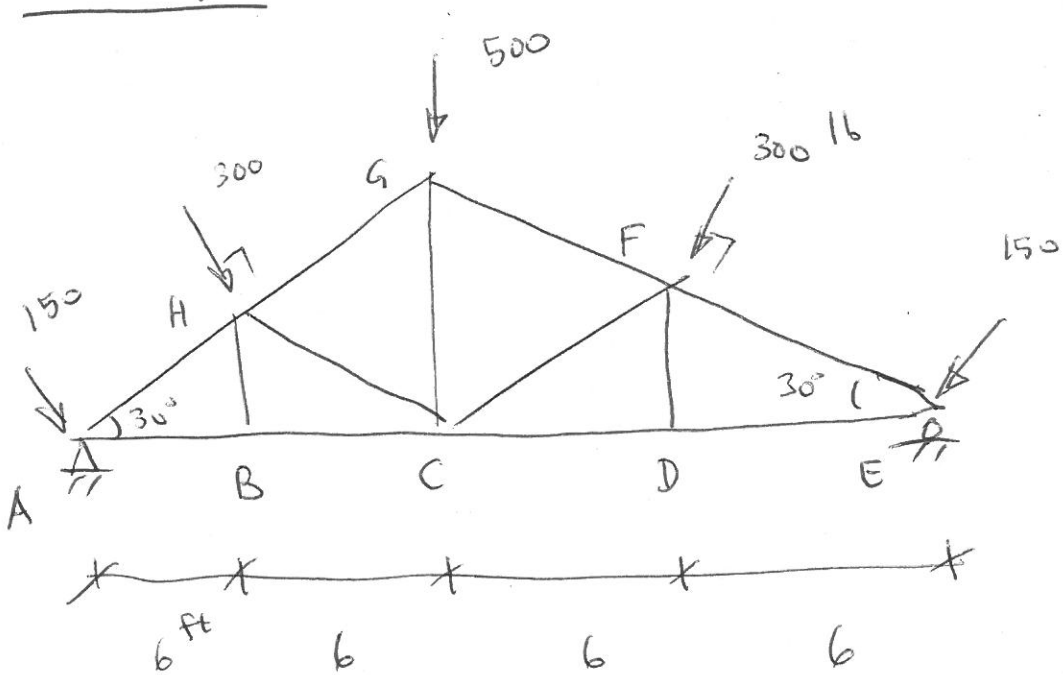

1° Reactions at A and E

2° ~~$F_{HA} = ?$~~

$F_{HG} = ?$

$F_{HC} = ?$

$F_{HB} = ?$

1° Free body diagram for whole structure (4)

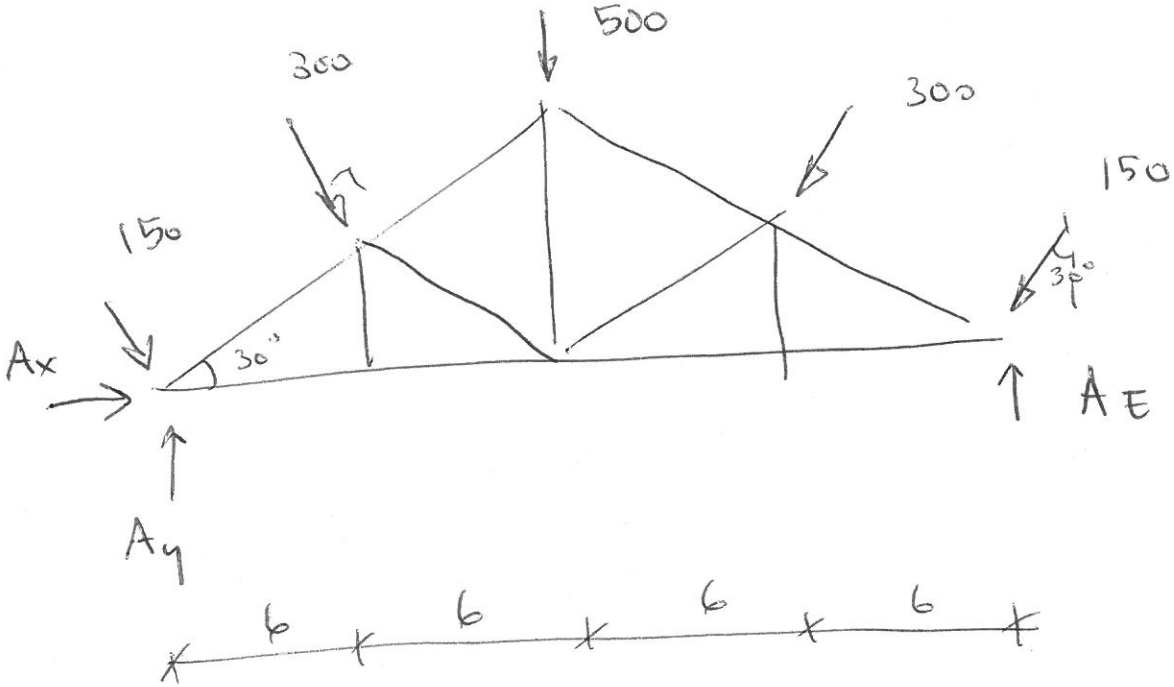

$\Sigma F_x = 0 \ (\rightarrow)$ $\quad A_x - 150 \sin 30^\circ - 300 \sin 30^\circ + 150 \sin 30^\circ + 300 \sin 30^\circ = 0$

$A_x = 0$

$\Sigma M_A = 0 \ (\circlearrowleft)$ $\quad A_E (24) - 150 \cos 30^\circ (24) - 300 \cos 30^\circ (18) + 300 \sin 30^\circ (6 \tan 30^\circ) - 500 (12) - 300 \left(\frac{6}{\cos 30^\circ}\right) = 0$

$A_E = 639.7 \text{ lb}$

$\Sigma F_y = 0 \ (\uparrow)$ $\quad A_y - 150 \cos 30^\circ (2) - 300 \cos 30^\circ (2) - 500 + 639.7 = 0$

$A_y = 639.7 \text{ lb}$

2° Free body diagram for part of structure (method of sections)

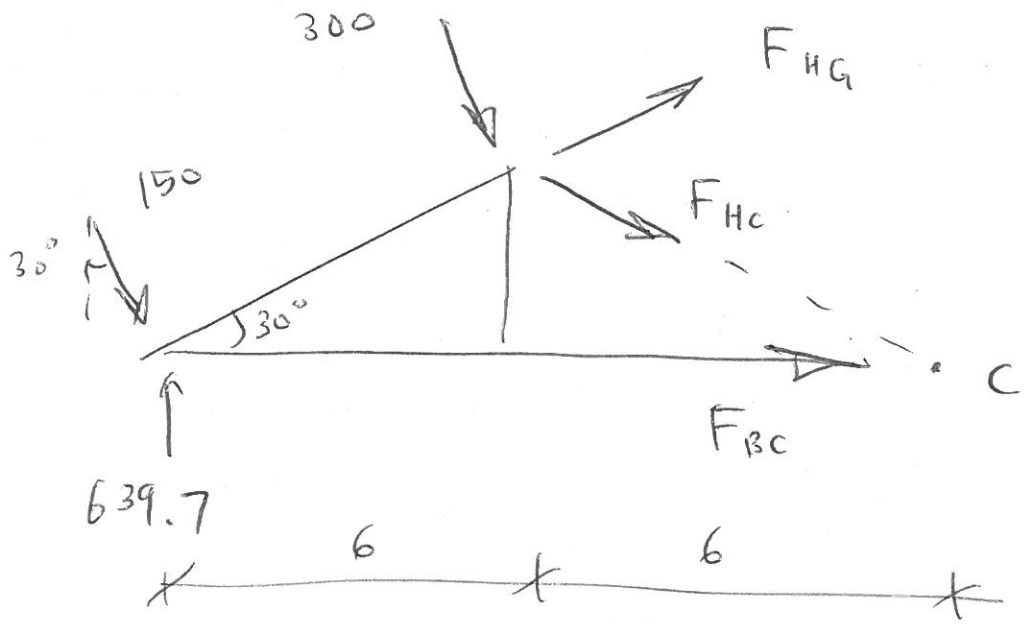

$\Sigma M_c = 0 \quad (\circlearrowleft)$ $\quad -639.7(12) + 150\cos 30^\circ (12)$

$+ 300\cos 30^\circ (6) - 300\sin 30^\circ (6\tan 30^\circ)$

$- F_{HG}(12\sin 30^\circ) = 0$

$F_{HG} = 846.4$ lb

$\Sigma F_y = 0, \quad (\uparrow)$ $\quad 639.7 - 150\cos 30^\circ - 300\cos 30^\circ$

$+ 846.4\sin 30^\circ - F_{HC}\sin 30^\circ = 0$

$F_{HC} = 1346.4$ lb

3° Free body diagram at joint B

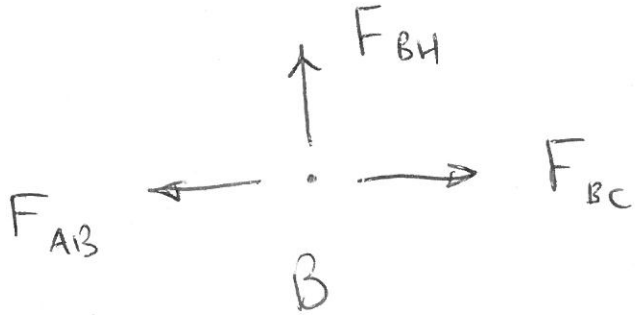

$\Sigma F_y = 0$. $(\uparrow)$ $F_{BH} = 0$

Zero-force member identification :

(a) three-member joint (say B)

(b) no loading @ the joint

(c) two members are aligned (AB & BC)

(d) the third member is zero-force. (BH)

$F_{BH} = 0$

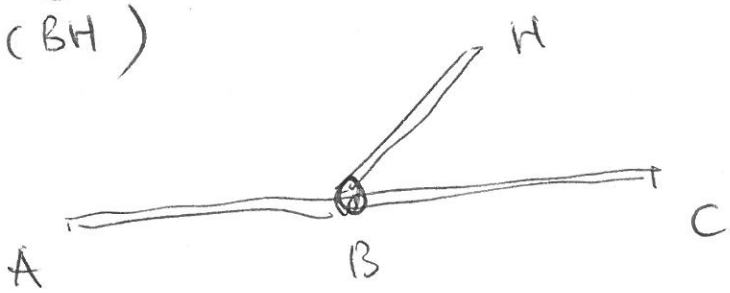

Statically Indeterminate Structures

If Reactions and/or internal forces cannot be found by three equilibrium equations, those structures are called statically indeterminate structures. Extra equations are needed from structural deformation.

Example

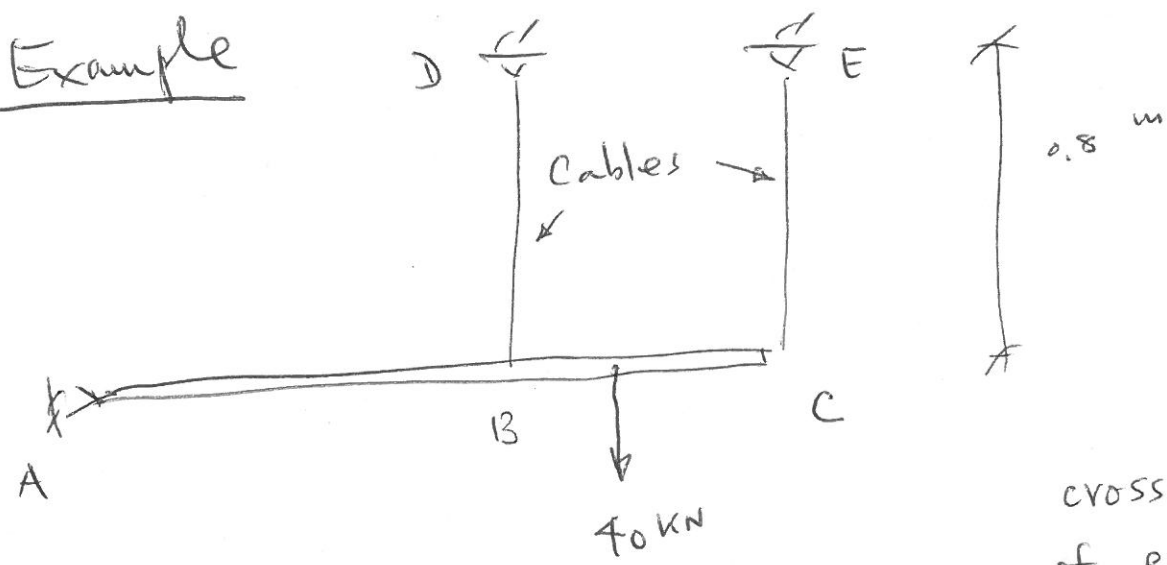

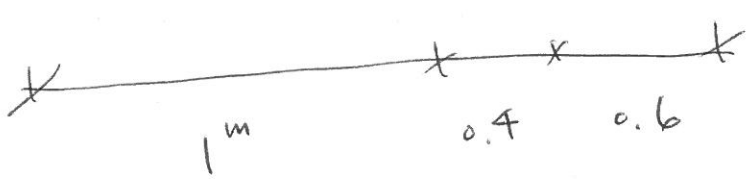

cross-sectional area of each cable

$A = 140 \ mm^2$

$E = 250 \ MPa$

$\sigma_{BD} = ?$, $\sigma_{CE} = ?$ $\delta_C = ?$

Solution

1° Use equilibrium equation

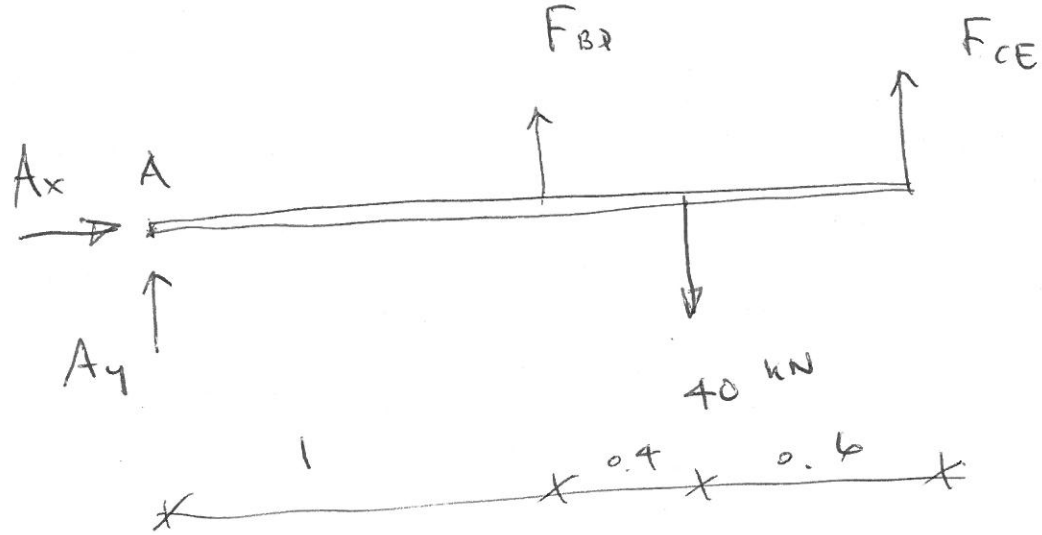

$\Sigma F_x = 0 \quad (\rightarrow) \qquad A_x = 0 \qquad \ldots (1)$

$\Sigma F_y = 0 \quad (\uparrow) \qquad A_y + F_{BD} + F_{CE} - 40 = 0 \qquad \ldots (2)$

$\Sigma M_A = 0 \quad (\circlearrowleft) \qquad F_{BD}(1) - 40(1.4) + F_{CE}(2) = 0 \qquad \ldots (3)$

Since we are interested in F_{BD} and F_{CE}, which are directly related to σ_{BD} and σ_{CE}, we only use the third equation.

2° Find deformation - force relationship (12)

$$\delta_B = \frac{F_{BD} L_{BD}}{E A} \quad , \quad \delta_C = \frac{F_{CE} L_{CE}}{E A} \qquad \text{--- (4) (5)}$$

3° Find deformation relationship at two points B and C.

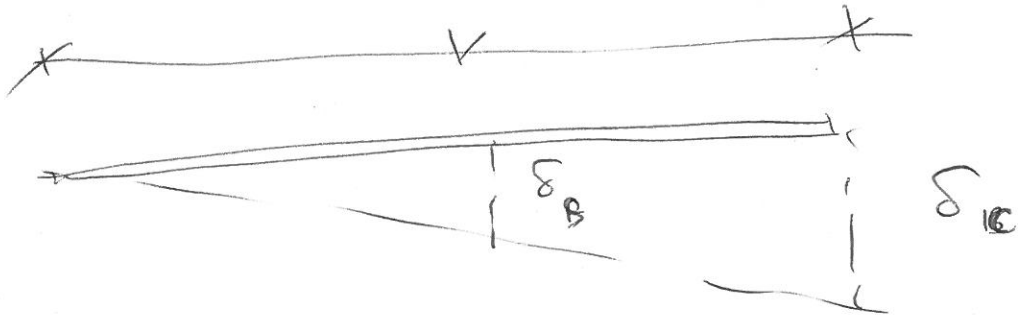

$$\frac{\delta_B}{\delta_C} = \frac{1}{2} \qquad \text{--- (6)}$$

Combining 2° and 3° results in

$$\frac{F_{BD}}{F_{CE}} = \frac{1}{2} \qquad \text{--- (7)}$$

Solving 3 and 7, one obtains

$$F_{BD} = 11.2 \text{ kN}, \qquad F_{CE} = 22.4 \text{ kN}$$

$$\sigma_{BD} = \frac{F_{BD}}{A} = 80 \text{ MPa}$$

$$\sigma_{CE} = \frac{F_{CE}}{A} = 160 \text{ MPa}$$

$$\delta_C = \frac{F_{CE} L_{CE}}{EA} = \frac{22.4(10^3)(0.8)}{200(10^9)(140)(10^{-6})} = 0.00064 \text{ m}$$

Thermal Effects

Force-induced deformation $\delta_F = \dfrac{FL}{EA}$

deformation by temperature change

$$\delta_T = \alpha L \Delta T$$

α = coefficient of thermal expansion

ΔT = temperature change

cross-sectional area A

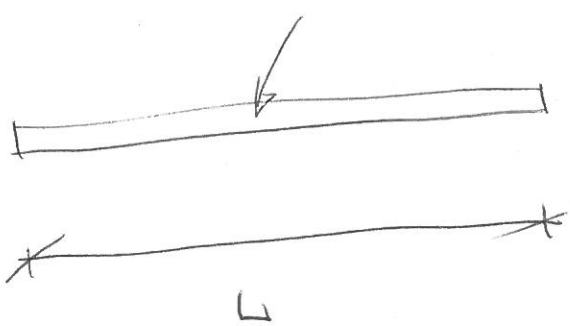

Example

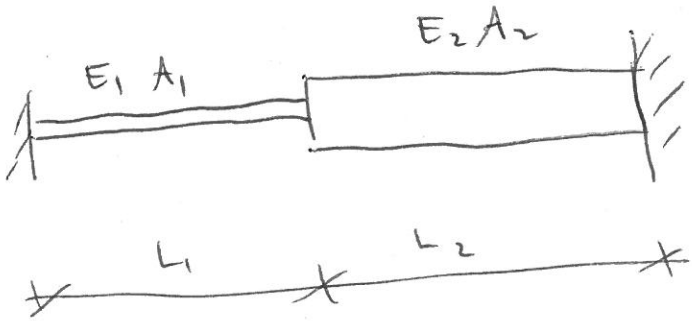

No forces in the bars at one temperature. If ΔT is given, what is the force in both bars?

Solution

total deformation caused by ΔT is

$$\delta = \delta_1 + \delta_2 = \alpha_1 L_1 \Delta T + \alpha_2 L_2 \Delta T$$

which will be compressed by compressive force in both bars after ΔT, or

$$\delta_F = \delta_{F_1} + \delta_{F_2} = \frac{F L_1}{E_1 A_1} + \frac{F L_2}{E_2 A_2}$$

$$\delta = \delta_F, \quad \text{or} \quad \alpha_1 L_1 \Delta T + \alpha_2 L_2 \Delta T = F\left(\frac{L_1}{E_1 A_1} + \frac{L_2}{E_2 A_2}\right)$$

$$F = \frac{(\alpha_1 L_1 + \alpha_2 L_2)\Delta T}{\frac{L_1}{E_1 A_1} + \frac{L_2}{E_2 A_2}}$$

PE Review I : Dynamics

Motion Equations for planar Motion

$$\sum F_x = m a_x$$

$$\sum F_y = m a_y$$

$$\sum M_A = I_A \alpha$$

a_x, a_y are acc. @ gravity center of a rigid body.

I_o = ~~mass~~ moment of inertia

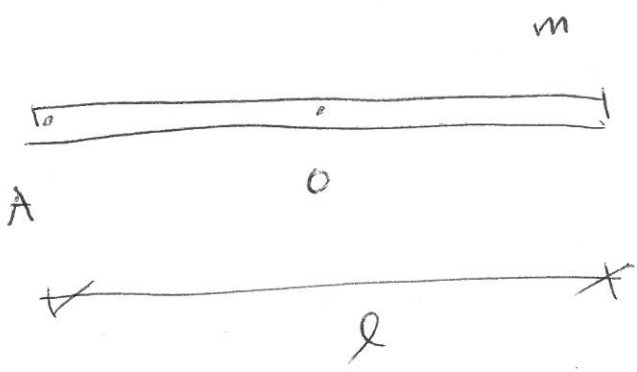

$$I_o = \frac{1}{12} m l^2$$

$$I_A = \frac{1}{3} m l^2$$

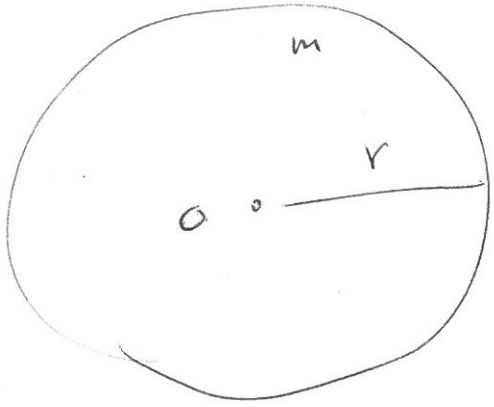

$$I_o = \frac{1}{2} m r^2$$

Motion relationship at two points

D2

$$\vec{v}_A = \vec{v}_B + \vec{\omega} \times \vec{r}_{A/B}$$

$$\vec{a}_A = \vec{a}_B + \vec{\alpha} \times \vec{r}_{A/B} - \omega^2 \vec{r}_{A/B}$$

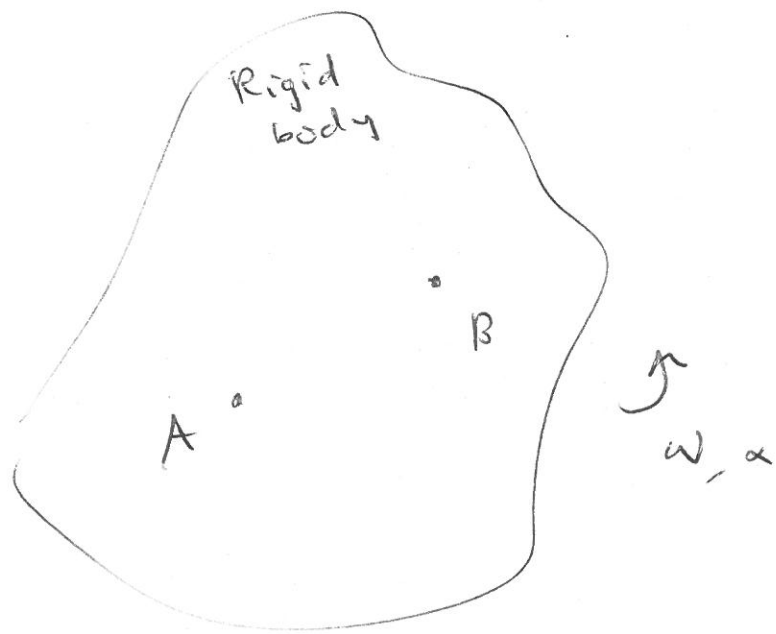

These two equations are used in Cartesian coordinates or $\vec{v}$ and $\vec{a}$ are expressed in $\vec{i}$ and $\vec{j}$ components, while $\vec{\omega}$ and $\vec{\alpha}$ in $\vec{k}$ component.

Principle of Work and Energy

Relating force, velocity and displacement at two positions

$$T_1 + U_{1-2} = T_2$$

$$T = \frac{1}{2} m v_c^2 + \frac{1}{2} I_c \omega^2 = \text{Kinetic Energy}$$

$$U_{1-2} = \int_0^s F\,ds + \int_0^\theta M\,d\theta = \text{Work}$$

where v_c and I_c are the quantites with respect to gravity center "C"

Special case :

If Work done by forces/moments excluding self-weight and spring forces are zero, total energy is constant,

or

$$T_1 + V_1 = T_2 + V_2$$

$$T = \frac{1}{2} m v_c^2 + \frac{1}{2} I_c \omega^2$$

$$V = mgy + \frac{1}{2} k \Delta x^2$$

where: y = the position of the weight, depending on the selection of datum

Δx = change of spring length, reference to unstretched length of the spring.

Principle of Impulse and Momentum

1° Linear Momentum

$$\Sigma \vec{F} = m\vec{a} = m\frac{d\vec{v}}{dt} = \frac{d(m\vec{v})}{dt}$$

$$\int_{t_1}^{t_2} \Sigma \vec{F}\, dt = m\vec{v}_{2/c} - m\vec{v}_{1/c}$$

special case, w/o external forces

$$m\vec{v}_A + m\vec{v}_B = \text{const}.$$

2° Angular Momentum

$$\vec{r} \times \Sigma F = \vec{r} \times \frac{d(m\vec{v})}{dt}$$

$\vec{r} \times \Sigma F$

$$\int_0^t \underbrace{(\vec{r} \times \Sigma \vec{F})}_{\Sigma M} dt = \int_0^t (\vec{r} \times m\vec{v}$$

$$= H_{0_2} - H_{0_1}$$

$$\Sigma M_c = I_c \alpha = \frac{dH_c}{dt}$$

moment w.r.t. the center of mass of a rigid body

$$H_c = I_c \omega = \text{angular momentum}$$

$$\int_{t_1}^{t_2} \Sigma M\, dt = H_2 - H_1$$

Impacts

1° Conservation of Momentum

If no external forces and moments.

then linear & angular momentum are conserved.

$$\begin{cases} m_A v_A + m_B v_B = \text{const.} & \leftarrow \underline{\sum F = 0} \\ H = \sum_i I_i \omega_i = \text{const.} & \leftarrow \sum M_o = 0 \\ H_o = (\vec{r} \times m\vec{v}) \cdot \vec{k} + I\omega = \text{const} \end{cases}$$

$H_{o1} + H_{o2} =$

2° Coefficient of Restitution

$$e = \frac{(v'_{Bp})_x - (v'_{Ap})_x}{(v_{Ap})_x - (v_{Bp})_x}$$

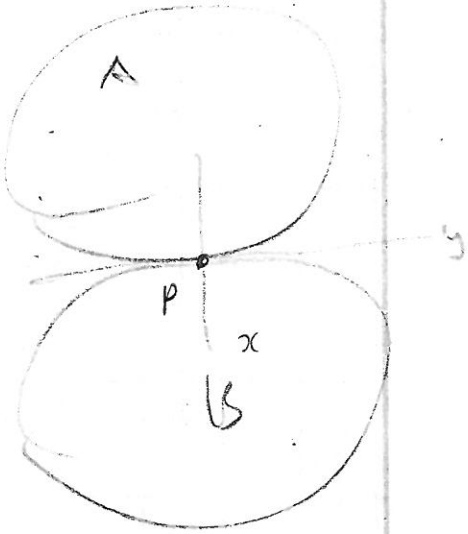

v' after impact

v before impact.

rest in the position shown. Determine its angular acceleration at that instant if (a) the surface is rough and the bar does not slip, and (b) the surface is smooth.

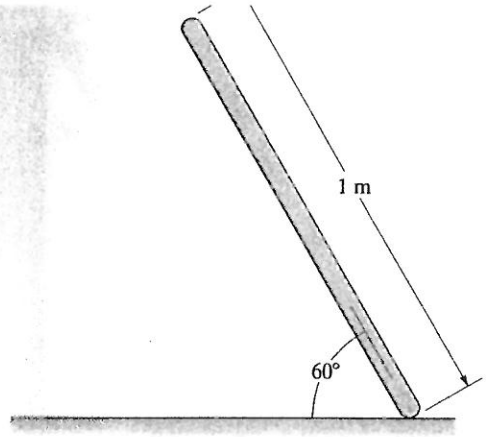

Solution:

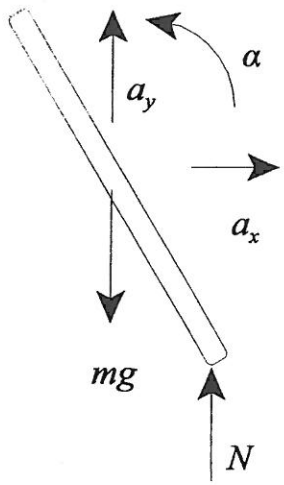

(a) The surface is rough. The lower end of the bar is fixed, and the bar rotates around that point.

$$\Sigma M_B : mg\frac{L}{2}\cos\theta = \frac{1}{3}\,mL^2\alpha$$

$$\alpha = \frac{3g}{2L}\cos\theta = \frac{3(9.81\ \text{m/s}^2)}{2(1\ \text{m})}\cos 60^\circ$$

$$\boxed{\alpha = 7.36\ \text{rad/s}^2.}$$

(b) The surface is smooth. There are four unknowns (N, a_x, a_y, α), three dynamic equations, and one constraint equation (the y component of the acceleration of the point in contact with the ground is zero).

$$\Sigma F_x : 0 = ma_x,$$

$$\Sigma F_y : N - mg = ma_y,$$

$$\Sigma M_G : N\frac{L}{2}\cos\theta = \frac{1}{12}\,mL^2\alpha$$

$$a_y + \alpha\frac{L}{2}\cos\theta = 0$$

Solving, we find

$$\alpha = \frac{6g\cos\theta}{L(1+3\cos^2\theta)} = \frac{6(9.81\ \text{m/s}^2)\cos 60^\circ}{(1\ \text{m})(1+3\cos^2 60^\circ)} = 16.8\ \text{rad/s}^2.$$

$$\boxed{\alpha = 16.8\ \text{rad/s}^2.}$$

Problem 14.75 The 1-slug mass m rotates around the vertical pole in a horizontal circular path. The angle $\alpha = 30°$ and the length of the string is $L = 4$ ft. What is the magnitude of the velocity of the mass?

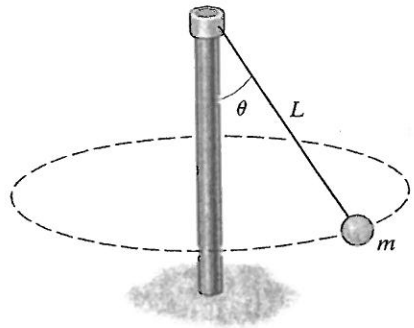

Strategy: Notice that the vertical acceleration of the mass is zero. Draw the free-body diagram of the mass and write Newton's second law in terms of tangential and normal components.

Solution:

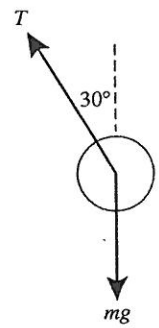

$$\sum F_{\uparrow} : T\cos 30° - mg = 0$$

$$\sum F_n : T\sin 30° = m\frac{v^2}{\rho} = m\frac{v^2}{L\sin 30°}$$

Solving we have

$$T = \frac{mg}{\cos 30°},\quad v^2 = g(L\sin 30°)\tan 30°$$

$$\boxed{v = \sqrt{\frac{(32.2\ \text{ft/s}^2)(4\ \text{ft})\sin^2 30°}{\cos 30°}} = 6.10\ \text{ft/s}}$$

Problem 14.76 In Problem 14.75, determine the magnitude of the velocity of the mass and the angle θ if the tension in the string is 50 lb.

Solution:

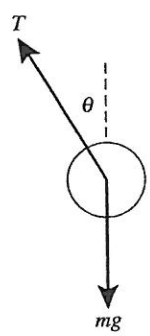

$$\sum F_{\uparrow} : T\cos\theta - mg = 0$$

$$\sum F_n : T\sin\theta = m\frac{v^2}{L\sin\theta}$$

Solving we find $\theta = \cos^{-1}\left(\frac{mg}{T}\right)$, $v = \sqrt{\frac{(T^2 - m^2g^2)L}{Tm}}$

Using the problem numbers we have

$$\boxed{\begin{aligned}\theta &= \cos^{-1}\left(\frac{1\ \text{slug}\ 32.2\ \text{ft/s}^2}{50\ \text{lb}}\right) = 49.9° \\ v &= \sqrt{\frac{[(50\ \text{lb})^2 - (1\ \text{slug}\ 32.2\ \text{ft/s}^2)^2]4\ \text{ft}}{(50\ \text{lb})(1\ \text{slug})}} = 10.8\ \text{ft/s}\end{aligned}}$$

Problem 15.135 The coefficients of friction between the 20-kg crate and the inclined surface are $\mu_s = 0.24$ and $\mu_k = 0.22$. If the crate starts from rest and the horizontal force $F = 200$ N, what is the magnitude of the velocity of the crate when it has moved 2 m?

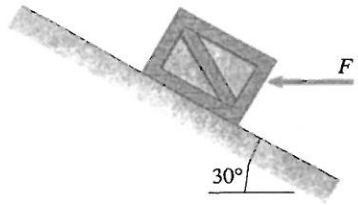

Solution:

$$\Sigma F_y = N - F\sin 30^\circ - mg\cos 30^\circ = 0,$$

so $N = F\sin 30^\circ + mg\cos 30^\circ = 270$ N.

The friction force necessary for equilibrium is

$$f = F\cos 30^\circ - mg\sin 30^\circ = 75.1 \text{ N}.$$

Since $\mu_s N = (0.24)(270) = 64.8$ N, the box will slip up the plane and $f = \mu_k N$. From work and energy,

$$(F\cos 30^\circ - mg\sin 30^\circ - \mu_k N)(2m) = \tfrac{1}{2}mv_2^2 - 0,$$

we obtain $v_2 = 1.77$ m/s.

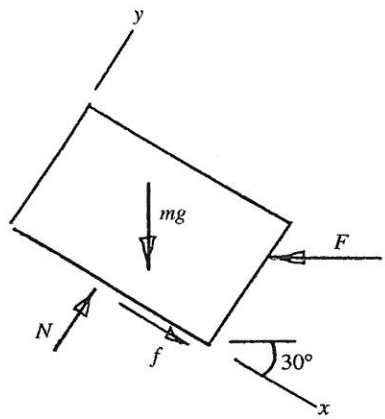

Problem 15.136 The coefficients of friction between the 20-kg crate and the inclined surface are $\mu_s = 0.24$ and $\mu_k = 0.22$. If the crate starts from rest and the horizontal force $F = 40$ N. What is the magnitude of the velocity of the create when it has moved 2 m?

Solution: See the solution of Problem 15.135. The normal force is

$$N = F\sin 30^\circ + mg\cos 30^\circ = 190 \text{ N}.$$

The friction force necessary for equilibrium is

$$f = F\cos 30^\circ - mg\sin 30^\circ = -63.5 \text{ N}.$$

Since $\mu_s N = (0.24)(190) = 45.6$ N, the box will slip down the plane and the friction force is $\mu_k N$ up the plane.

From work and energy,

$$(mg\sin 30^\circ - F\cos 30^\circ - \mu_k N)(2m) = \tfrac{1}{2}mv_2^2 - 0,$$

we obtain $v_2 = 2.08$ m/s.

cylindrical disk are released from rest with the bar horizontal. The disk rolls on the curved surface. What is the angular velocity of the bar when it is vertical?

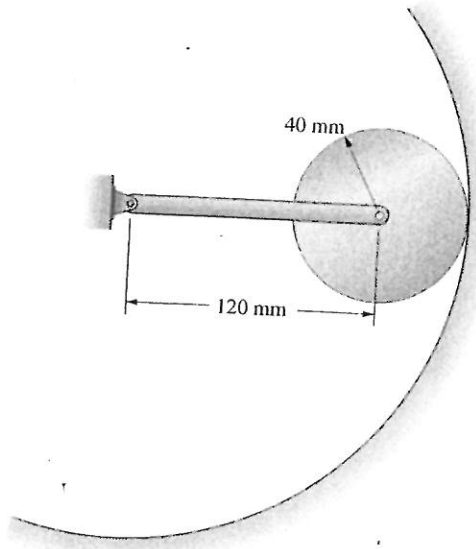

Solution: From the principle of work and energy, $U = T_2 - T_1$, where $T_1 = 0$. Denote $L = 0.12$ m, $R = 0.04$ m, the angular velocity of the bar by ω_B, the velocity of the disk center by v_D, and the angular velocity of the disk by ω_D. The work done is

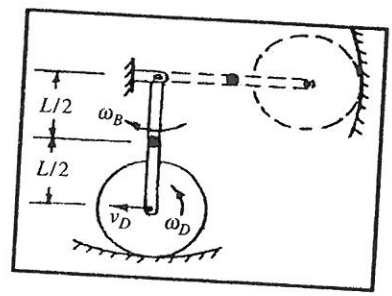

$$U = \int_0^{-\frac{L}{2}} -m_B g\, dh + \int_0^{-L} -m_D g\, dh = \left(\frac{L}{2}\right) m_B g + L m_D g.$$

From kinematics, $v_D = L\omega_B$, and $\omega_D = \dfrac{v_D}{R}$. The kinetic energy is

$$T_2 = \left(\frac{1}{2}\right) I_B \omega_B^2 + \left(\frac{1}{2}\right) m_D v_D^2 + \left(\frac{1}{2}\right) I_D \omega_D^2.$$

Substitute the kinematic relations to obtain

$$T_2 = \left(\frac{1}{2}\right)\left(I_B + m_D L^2 + I_D \left(\frac{L}{R}\right)^2\right)\omega_B^2,$$

where $I_B = \dfrac{m_B L^2}{3}$,

$$I_D = \frac{m_D R^2}{2},$$

from which $T_2 = \left(\dfrac{1}{2}\right)\left(\dfrac{m_B}{3} + \dfrac{3m_D}{2}\right) L^2 \omega_B^2$.

Substitute into $U = T_2$ and solve:

$$\boxed{\omega_B = \sqrt{\frac{6\, g(m_B + 2m_D)}{(2m_B + 9m_D)L}} = 11.1 \text{ rad/s.}}$$

Problem 15.154 The spring constant is $k = 850$ N/m, $m_A = 40$ kg, and $m_B = 60$ kg. The collar A slides on the smooth horizontal bar. The system is released from rest in the position shown with the spring unstretched. Use conservation of energy to determine the velocity of the collar A when it has moved 0.5 m to the right.

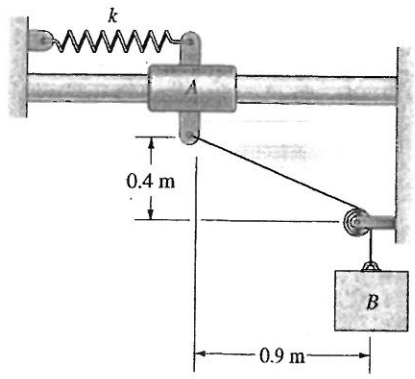

Solution: Let v_A and v_B be the velocities of A and B when A has moved 0.5 m. The component of $A's$ velocity parallel to the cable equals $B's$ velocity: $v_A \cos 45° = v_B$. B's downward displacement during $A's$ motion is

$$\sqrt{(0.4)^2 + (0.9)^2} - \sqrt{(0.4)^2 + (0.4)^2} = 0.419 \text{ m}.$$

Conservation of energy is $T_1 + V_2 = T_2 + V_2$:

$$0 + 0 = \tfrac{1}{2}(40)v_A{}^2 + \tfrac{1}{2}(60)(v_A \cos 45°)^2$$

$$+ \tfrac{1}{2}(850)(0.5)^2 - (60)(9.81)(0.419).$$

Solving, $v_A = 2.00$ m/s.

Problem 15.155 The y-axis is vertical and the curved bar is smooth. If the magnitude of the velocity of the 4-lb slider is 6 ft/s at position 1, what is the magnitude of its velocity when it reaches position 2?

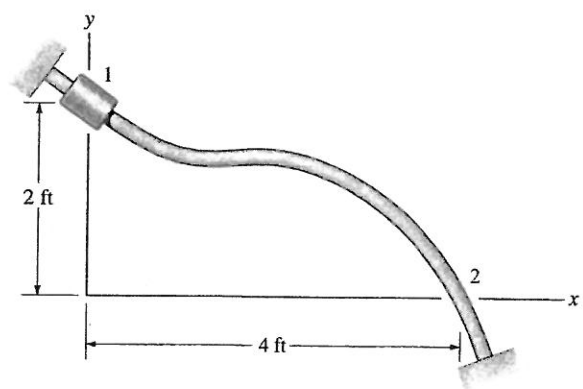

Solution: Choose the datum at position 2. At position 2, the energy condition is

$$\frac{1}{2}\left(\frac{W}{g}\right)v_1^2 + Wh = \frac{1}{2}\left(\frac{W}{g}\right)v_2^2,$$

where $h = 2$, from which

$$v_2 = \sqrt{v_1^2 + 2\,gh} = \sqrt{6^2 + 2\,g(2)} = 12.83 \text{ ft/s}$$

Problem 15.84 The mass of the ball is $m = 2$ kg and the string's length is $L = 1$ m. The ball is released from rest in position 1. When the string is vertical, it hits the fixed peg shown.

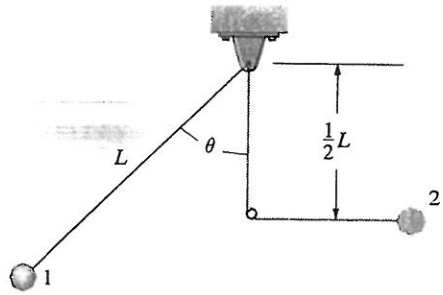

(a) Use conservation of energy to determine the minimum angle θ necessary for the ball to swing to position 2.

(b) If the ball is released at the minimum angle θ determined in part (a), what is the tension in the string just before and just after it hits the peg?

$m = 2$ kg

$L = 1$ m

Solution: Energy is conserved. $v_1 = v_2 = 0$ Use $\theta = 90°$ as the datum.

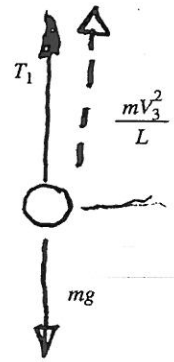

(a) $\frac{1}{2}mv_1^2 + mg(-L\cos\theta_1) = \frac{1}{2}mv_2^2 - mg\frac{L}{2}$

$0 - mgL\cos\theta_1 = 0 - mg\frac{L}{2}$

$\cos\theta_1 = \frac{1}{2}$

$\theta = 60°$

(b) Use conservation of energy to determine velocity at the lowest point, (state 3) ($v_1 \equiv 0$)

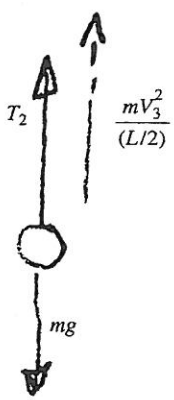

$\frac{1}{2}mv_1^2 - mgL\cos 60° = \frac{1}{2}mv_3^2 - mgL$

$\frac{1}{2}mv_3^2 = mgL - mgL/2$

$v_3^2 = gL = 9.81\ \frac{\text{m}^2}{\text{s}^2}$

$v_3 = 3.13$ m/s at $\theta = 0°$.

Before striking the peg

$T_1 - mg = mv_3^2/L$

$T_1 = (2)(9.81) + (2)(9.81)/(1)$

$\underline{T_1 = 39.2\ \text{N}}$

After striking the peg.

$T - mg = mv_3^2/(L/2)$

$T = (2)(9.81) + 2[(2)(9.81)/1]$

$T = 58.9$ N

Problem 15.148 A 180-lb student runs at 15 ft/s, grabs a rope, and swings out over a lake. He releases the rope when his velocity is zero.

(a) What is the angle θ when he releases the rope?
(b) What is the tension in the rope just before he release it?
(c) What is the maximum tension in the rope?

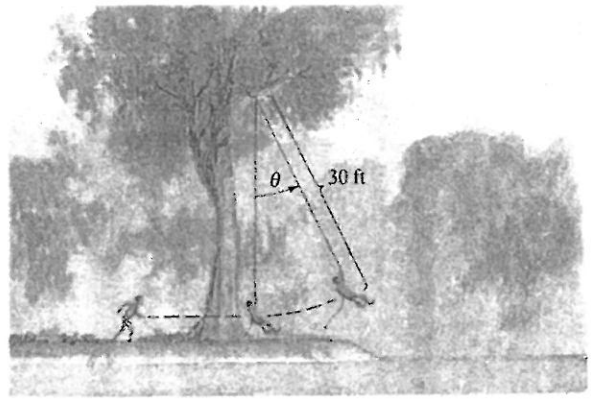

Solution:

(a) The energy condition after the seizure of the rope is

$$\tfrac{1}{2}mv_0^2 = \tfrac{1}{2}mv^2 + mgL(1-\cos\theta),$$

where $v_0 = 15$ ft/s, $L = 30$ ft. When the velocity is zero, $v_0^2 = 2gL(1-\cos\theta)$, from which

$$\cos\theta = 1 - \frac{v_0^2}{2gL} = 0.883, \theta = 27.9°$$

(b) From the energy equation $v^2 = v_0^2 - 2gL(1-\cos\theta)$. From Newton's second law, $(W/g)(v^2/L) = T - W\cos\theta$, from which

$$T = \left(\frac{W}{g}\right)\left(\frac{v^2}{L}\right) + W\cos\theta = 159.0 \text{ lb}.$$

(c) The maximum tension occurs at the angle for which

$$\frac{dT}{d\theta} = 0 = -2W\sin\theta - W\sin\theta,$$

from which $\theta = 0$, from which

$$T_{\max} = W\left(\frac{v_0^2}{gL} + 1\right) = 222 \text{ lb}$$

Problem 15.149 If the student in Problem 15.148 releases the rope when $\theta = 25°$, what maximum height does he reach relative to his position when he grabs the rope?

Solution: Use the solution to Problem 15.148. [The height when he releases the rope is $h_1 = L(1-\cos 25°) = 2.81$ ft.] Before he releases the rope, the total energy is

$$\frac{1}{2}\left(\frac{W}{g}\right)v_0^2 - WL = \frac{1}{2}\left(\frac{W}{g}\right)v^2 - WL\cos\theta.$$

Substitute $v_0 = 15$ ft/s, $\theta = 25°$ and solve: $v = 6.63$ ft/s. The horizontal component of velocity is $v\cos\theta = 6.01$ ft/s. From conservation of energy:

$$W(2.81) + \tfrac{1}{2}m(6.63^2) = Wh + \tfrac{1}{2}m(6.01^2)$$

from which $h = 2.93$ ft

Problem 19.35 The mass of the suspended object A is 8 kg. The mass of the pulley is 5 kg, and its moment of inertia is 0.036 kg - m^2. If the force $T = 70$N is applied to the stationary system, what is the magnitude of the velocity of A when it has risen 0.2 m?

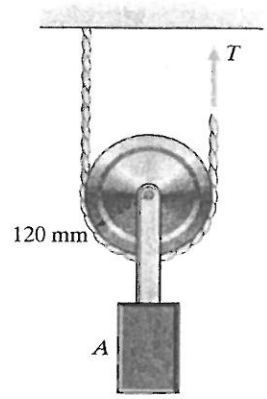

Solution: When the mass A rises 0.2 m, the end of the rope rises 0.4 m.

$$T_1 = 0,\ V_1 = 0,\ T_2 = \frac{1}{2}(13\text{ kg})v^2 + \frac{1}{2}(0.036\text{ kg-m}^2)\left(\frac{v}{0.12\text{ m}}\right)^2$$

$$V_2 = (13\text{ kg})(9.81\text{ m/s}^2)(0.2\text{ m}),\ U = (70\text{ N})(0.4\text{ m})$$

$$T_1 + V_1 + U = T_2 + V_2 \Rightarrow v = \boxed{0.568\text{ m/s}}$$

Problem 19.36 The mass of the left Pulley is 7 kg, and its moment of inertia is 0.330 kg-m^2. The mass of the right pulley is 3 kg, and its moment of inertia is 0.054 kg-m^2. If the system is released from rest, how fast is the 18-kg mass moving when it has fallen 0.1 m?

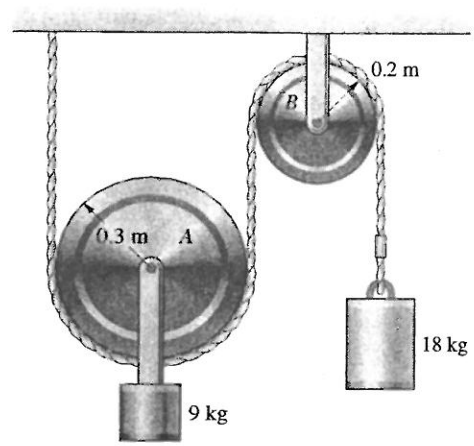

Solution: when mass C falls a distance x, the center of pulley A rises $\frac{1}{2}x$. The potential energy is

$$v = -m_c g x + (m_A + m_D) g \tfrac{1}{2} x.$$

The angular velocity of pulley B is $w_B = v/R_B$, and the angular velocity of pulley A is $w_A = v/2R_A$. The velocity of the center of pulley A is $w_A R_A = v/2$. The total kinetic energy is

$$T = \tfrac{1}{2}m_c v^2 + \tfrac{1}{2}I_B(v/R_B)^2 + \tfrac{1}{2}(m_A + m_D)(v/2)^2 + \tfrac{1}{2}I_A(v/2R_A)^2.$$

Applying conservation of energy to the initial and final positions,

$$O = -m_c g(0.1) + (m_A + m_D) g \tfrac{1}{2}(0.1) + \tfrac{1}{2}m_c v^2 + \tfrac{1}{2}I_B(v/R_B)^2$$

$$+ \tfrac{1}{2}(m_A + m_D)(v/2)^2 + \tfrac{1}{2}I_A(v/2R_A)^2.$$

Solving for v, we obtain

$$v = 0.899\text{ m/s}.$$

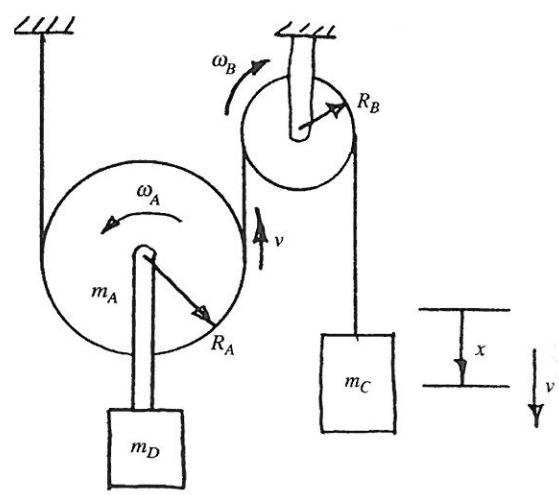

Problem 18.51 The mass of the suspended object A is 8 kg. The mass of the pulley is 5 kg, and its moment of inertia is 0.036 kg-m^2. If the force $T = 70$ N, what is the magnitude of the acceleration of A?

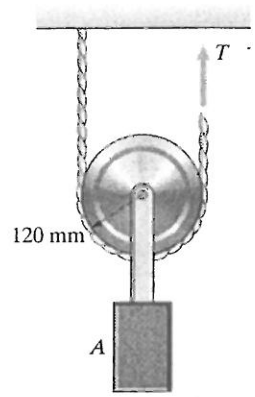

Solution: Given

$m_A = 8$ kg, $m_B = 5$ kg, $I_B = 0.036$ kg-m^2

$R = 0.12$ m, $g = 9.81$ m/s^2, $T = 70$ N

The FBDs

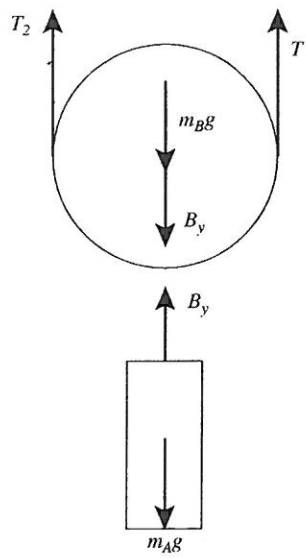

The dynamic equations

$$\sum F_{yB} : T_2 + T - m_Bg - B_y = m_Ba_{By}$$

$$\sum F_{yA} : B_y - m_Ag = m_Aa_{Ay}$$

$$\sum M_B : -T_2R + TR = I_B\alpha_B$$

Kinematic constraints

$a_{By} = a_{Ay}$, $a_{By} = R\alpha_B$

Solving we find $\boxed{a_{Ay} = 0.805 \text{ m/s}^2}$

We also have

$a_{By} = 0.805$ m/s^2, $\alpha_B = 6.70$ rad/s, $T_2 = 68.0$ N, $B_y = 84.9$ N

5-4

Problem 16.76 Two small balls, each of mass $m = 0.12$ kg, hang from strings of length $L = 1$ m. The left ball is released from rest with $\theta = 30°$. As a result of the initial collision, the right ball swings through a maximum angle of 25°. Determine the coefficient of restitution.

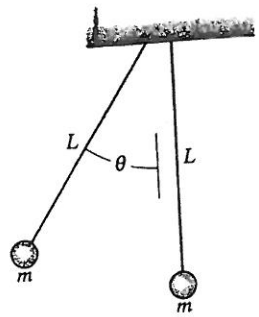

Solution: Use conservation of energy to determine velocities of mass 1 before the collision and mass 2 after the collision. Then analyze the collision.

Low Point ($\theta = 0$) is dafum

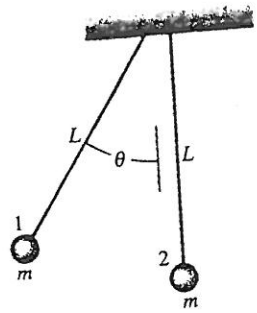

Ball 1: $\theta = 30°$, $L = 1$ m, $m = 0.12$ kg

$$\frac{1}{2}m(0)^2 + mg(L - L\cos\theta) = \frac{1}{2}mV_1^2 + 0$$

$V_1 = 1.62$ m/s just before collision

Ball 2: $\theta = 25°$

$$\frac{1}{2}mV_2^2 + 0 = \frac{1}{2}m(0)^2 + mg(L - L\cos\theta)$$

$V_2' = 1.36$ m/s just after collision

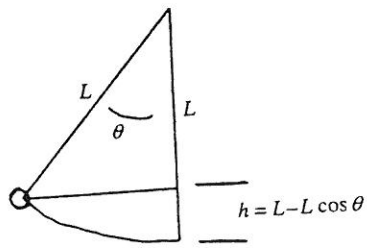

Impact Analysis:

$$m_1V_1 + m_2V_2 = m_1V_1' + m_2V_2'$$

$V_1 = 1.62$ m/s, $V_2 = 0$, $V_2' = 1.36$ m/s

Solving for V_1' we get

$V_1' = 0.265$ m/s

$$e = \frac{V_2' - V_1'}{V_1 - V_2}$$

Solving, we get $\underline{e = 0.673}$

Problem 16.66 Suppose you investigate an accident in which a 1300-kg car A struck a parked 1200-kg car B. All four of B's wheels were locked, and skid marks indicate that B slid 2 m after the impact. If you estimate the coefficient of friction between B's tires and the road to $\mu_k = 0.8$ and the coefficient of restitution of the impact to be $e = 0.4$, what was A's velocity just before the impact? (Assume that only one impact occurred.)

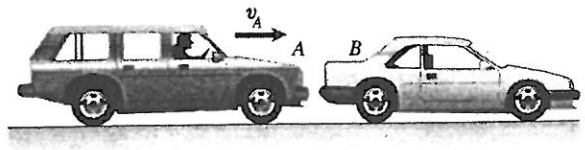

Solution: The work done in producing the skid marks is

$$\int_0^s F\,ds = \int_0^2 -\mu_k m_B g\,ds = -2\mu_k m_B\, g.$$

This is equal to the kinetic energy of B the instant after impact $\frac{1}{2}m_B(v'_B)^2 = 2\mu_k m_B g$, from which $v'_B = \sqrt{4\mu_k g} = 5.6$ m/s. For B stationary, the conservation of linear momentum condition is $m_A v_A = m_A v'_A + m_B v'_B$, and the coefficient of restitution is $e v_A = v'_B - v'_A$. Solve:

$$v'_A = \left(\frac{m_A - e m_B}{m_A + m_B}\right) v_A,\ v'_B = \frac{m_A(1+e)}{m_A + m_B} v_A,$$

from which

$$\boxed{v_A = \frac{(m_A + m_B)}{m_A(1+e)} v'_B = 7.70 \text{ m/s.}}$$

[*Check.* From the solution to Problem 16.45, for B stationary,

$$v'_B = \left(\frac{1}{m_A + m_B}\right)(m_A(1+e)v_A + (m_B - e m_A)v_B)$$

$$= \frac{m_A}{(m_A + m_B)}(1+e)v_A,$$

from which

$$v_A = \frac{(m_A + m_B)}{m_A(1+e)} v'_B = 7.70 \text{ m/s}$$

check.]

Problem 16.67 When the player releases the ball from rest at a height of 5 ft above the floor, it bounces to a height of 3.5 ft. If he throws the ball downward, releasing it at 3 ft above the floor, how fast would he need to throw it so that it would bounce to a height of 12 ft?

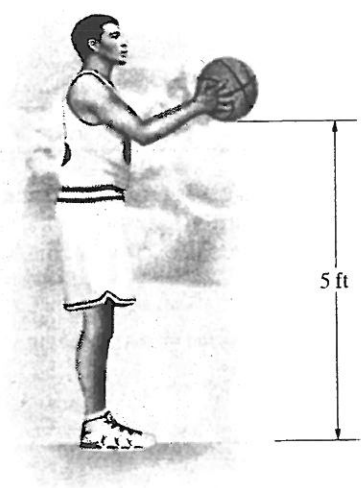

Solution: When dropped from 5 ft, the ball hits the floor with a speed

$$v_{\text{before}} = \sqrt{2(32.2 \text{ ft/s}^2)(5 \text{ ft})} = 17.94 \text{ ft/s}$$

In order to rebound to 3.5 ft, it must leave the floor with a speed

$$v_{\text{after}} = \sqrt{2(32.2 \text{ ft/s}^2)(3.5 \text{ ft})} = 15.01 \text{ ft/s}$$

The coefficient of restitution is therefore $e = \dfrac{15.01 \text{ ft/s}}{17.94 \text{ ft/s}} = 0.837$

To bounce to a height of 12 ft we need a rebound velocity of

$$v_{\text{rebound}} = \sqrt{2(32.2 \text{ ft/s}^2)(12 \text{ ft})} = 27.80 \text{ ft/s}$$

Therefore, the ball must have a downward velocity of $\dfrac{27.80 \text{ ft/s}}{0.837} =$ 33.23 ft/s before it hits the floor. To find the original velocity when it leaves his hands,

$$\frac{1}{2}mv^2 + m(32.2 \text{ ft/s}^2)(3 \text{ ft}) = \frac{1}{2}m(33.23 \text{ ft/s})^2 \Rightarrow \boxed{v = 30.2 \text{ ft/s}}$$